Powerscreen International. Dist. Ltd.
Coalisland Road, Dungannon,
Co.Tyrone, N.Ireland BT71 4DR
Tel: +44(0) 2887 740701
Fax: +44(0) 2887 746569
Email: mail@powerscreen.co.uk

INTRODUCING THE

Powertrack 800

All specifications subject to change without prior notice.

FEATURES

• Total weight	20,000kg
• Width (transport)	3.17m
• Length (transport)	11.1m
• Height (transport)	3.99m
• Screenunit	2 - bearing 3.048 x 2.134m (10' x 7")
• Powerunit	4 cylinder developing 97 Hp (72kW)

ADVANTAGES

- High capacity up to 600 TPH, (depending on mesh sizes and material type).
- Quick set up time typically under 5 minutes.
- Maximum mobility with remote / radio controlled track operation.
- High performance hydraulic system
- Angle adjustable screenbox with radio control tipping screenbox.

APPLICATIONS

- Sand and gravel
- Topsoil
- Coal
- Crushed stone
- Recycling
- Demolition

All specifications subject to change without prior notice.

The Powerscreen Powertrack is a high capacity heavy duty mobile scalping and conveying unit.

Built to withstand the rigours of handling materials like rock or demolition concrete, this machine is equally at home when fine screening down to 1/4" product size.

The product design allows the machine to operate in very confined spaces and the high mobility factor eliminates set up time.

This means: Drive onto a level site, switch on the machine and produce graded material in under 2 minutes.

The Powerscreen Powertrack machine is a specially adapted Powergrid fitted with crawler tracks which can be moved along on site by the operator via remote radio control signal from a hand held remote radio control unit. Road transport is by low-loading trailer only. To meet transport regulations on low-loading trailer the overall height of the machine has been reduced to 3.4m (11' 2") and overall width is 2.93m (9' 7"). Legal limit is 3.0m (9' 10").
The Powertrack chassis frame is reinforced and tracks are bolted in place using special mounting brackets. The upper part of the chassis / framework is standard. Specially designed mudguards along the tracks and "tapered" guard doors either end give the Powertrack a "streamlined" shape.

Scalping Unit:

The scalping unit is constructed from heavy duty plate and box sections having two screening surfaces 10' x 7' long each.

Scalping action is provided by flywheels and an eccentric screenshaft in a conventional 2 bearing screen arrangement.

A fixed loading plate is standard equipment. A range of mesh sizes from 4" to 1/4" are available and are end tension design to facilitate replacement. A bofor steel grizzly bar reject grid is fitted to the top deck.

The screening angle may be adjusted from 12 to 27 degrees by means of two hydraulic rams.

Wear plates for screenbox wing plates sides and loading plate are optionally available.

Powerunit:

Power is provided by a 97 Hp turbo diesel hydraulic unit. The Powerunit including engine, hydraulic tank, pump, control valves, starter panel; battery is enclosed in a cabinet mounted directly on top of the front chassis assembly. This allows much easier access for operation and maintenance purposes.

Hopper and Conveyor:

A steel plate hopper mounted under the screen directs the material onto the conveyor and rubber skirting eliminates spillage. The conveyor is 1500mm (5') wide and discharges at a height of 2.55m (8' - 4"). The belt is a 3 ply heavy duty with vulcanised joint and fitted with self adjusting belt cleaner. The conveyor is fully skirted to prevent material spillage.

Mobility & Transport:

The Powertrack is fitted with heavy duty excavator type crawler tracks to facilitate mobility. For road transport the Powertrack is carried on a flat bed low loader

Operation:

Output of up to 600 tonnes per hour are achievable with a competent shovel operator loading material evenly onto the screen.
There are many different applications and the variables within these can affect tonnage achieved

Remote Control:

The radio control system consists of a receiver, a hand held battery powered radio control unit and a remote hand help control unit with cable. The remote backup / control unit by-passes the radio system completely and is a purely 12 volt electric system. It would only be used in an emergency for example if remote control unit was lost or damaged. The hand held remote control unit has two toggle switches to operate each track forward and back independently, a button to operate the 12 volt diverter valve and an emergency stop button which stops the engine in an emergency situation.

Remote Control Cont'd:

The control unit has two "rocker" switches work as follows:-

(i) Push both buttons forward - Powertrack moves forward in a straight line.

(ii) Push both buttons backwards - Powertrack moves backwards in a straight line.

(iii) Push one button forward and one button back - Powertrack turns right or left.

The radio control system also controls the operation of the conveyor and the screenbox. These can be started and stopped using the hand held unit. When using the hand remote unit to operate the machine, if the signal is broken due to interference the machine will shut down. This is a safety feature and meets CE regulations.

OPTIONS

Top deck Screens:

The Powertrack screenbox has a number of different screen types apart from conventional wire meshes. A Heavy Duty Bofor grid is available featuring a tapered opening from 90mm to 110mm (3.5" to 4.3") nominal aperture. Punched plate screens are available with a range of opening sizes up to 150mm (hexagonal). A heavy duty solid steel plate finger screen is available with a range of apertures.

Bottom deck Screens:

The Powertrack also has the option of finger screens on the bottom deck instead of conventional wire meshes.

Hydraulics:

Variable speed control of main belt is available.

Remote Control Tipping:

The screenbox can be tipped from its screening position to its maximum screen angle via the track unit radio control.

DIESEL / HYDRAULIC DRIVE

Engine:

4 cylinder Tier 3 engine running at 2300 rpm developing 74kW (97Hp)

HYDRAULICS

Hydraulic Pump:

33cc/33cc clockwise tandem pump, driving two deck screen on one circuit and main conveyor on the other circuit. Both circuits having a flow rate of 69 litres (15.2 gals) per minute.

Hydraulic Motors:

Screen Motor	MCC 2208	(58cc per rev)
Conveyor Motor	OMV800	(800cc per rev)

Control Valves:

Screen Circuit	SD14 Set at 235 Bar (3400 psi)
Conveyor Circuit	SDM140 Set at 235 Bar (3400 psi)
Auxiliary Circuits	CV111 (These pressures on Powertrack ONLY)
Pressure Relief Valve	8F419B Set at 192 Bar (2800 psi)

The screen and conveyor control valves operate the screen and conveyor as normal but two 12 volt diverter valves are fitted (one on each control valve outlet port). When the diverter valves are activated (by one button on hand-held radio control unit) the screen and conveyor belt stop and hydraulic oil is diverted through two 12 volt double acting solenoid valves, one used to control each track. In other words, screen circuit drives the LH track and conveyor circuit drives RH track.
The solenoid valves are operated by radio signal from a hand held remote control unit.

Recommended Hydraulic Oil:

0c to 30c Ambient temp	Shell Tellus 46 (or equivalent)
+30c Ambient temp	Shell Tellus 100 (or equivalent)

Hydraulic System Capacity:

506 litres (110gals)

Typical Operating Pressures:

(i) Screen	
Empty or full:-	42 Bar (600 psi)
(ii) Conveyor	
Empty:-	56 Bar (800 psi)
600 Tonne per hour:-	150 Bar (2150 psi)

Screen Shaft Speed:

Empty:-	1150 rpm
Full:-	1100 rpm

Main Conveyor:

Conveyor belt:-	3 ply x 1500mm (60”) wide
Drums outside diameter:-	273mm (10.75”)
Drum centres:-	7.68m (25’ - 2”)
Drum speed empty:-	123 rpm
Drum speed full:-	80 rpm
Conveyor belt speed empty:-	105 m/min (345 ft/min)
Conveyor belt speed full:-	70 m/min (237 ft/min)

Tracks:

Tracks have 19.6 degrees gradeability with a gearbox ratio of 122:1, motor displacement of 63cc/rev and a maximum speed of 1.02km/hr.

Dimensions:

Sprocket Centre/Idler Centre	=	2.920 m (9’ 7”)
Overall Track Length	=	3.630 m (11’ 11”)
Track Height	=	0.740 m (2’ 5”)
Track Shoe Width	=	0.400 m (1’ 3 ¾”)

POWERTRACK 800 TRANSPORT

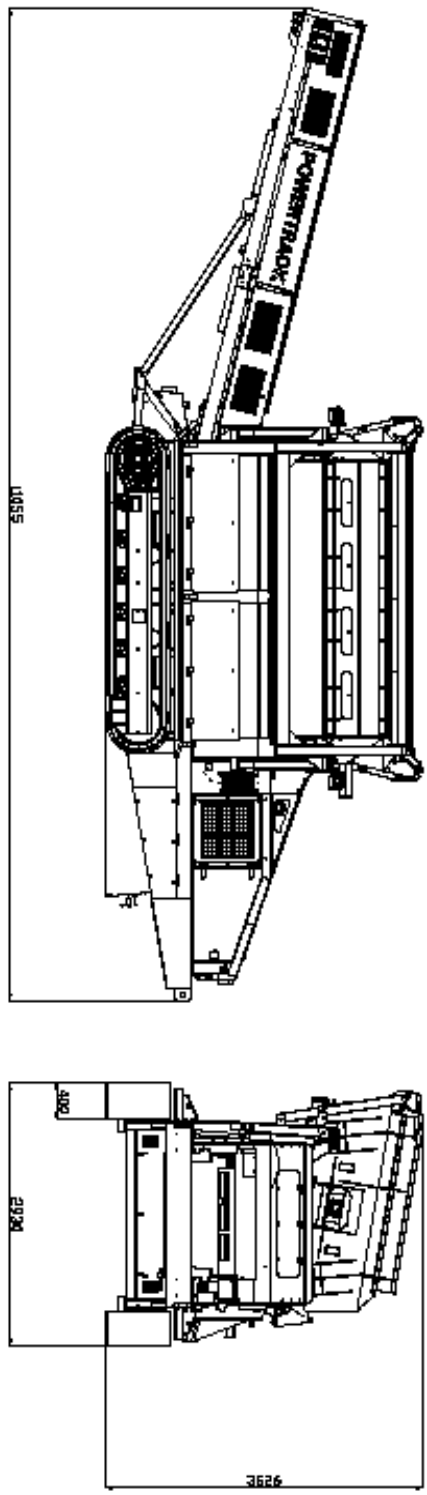

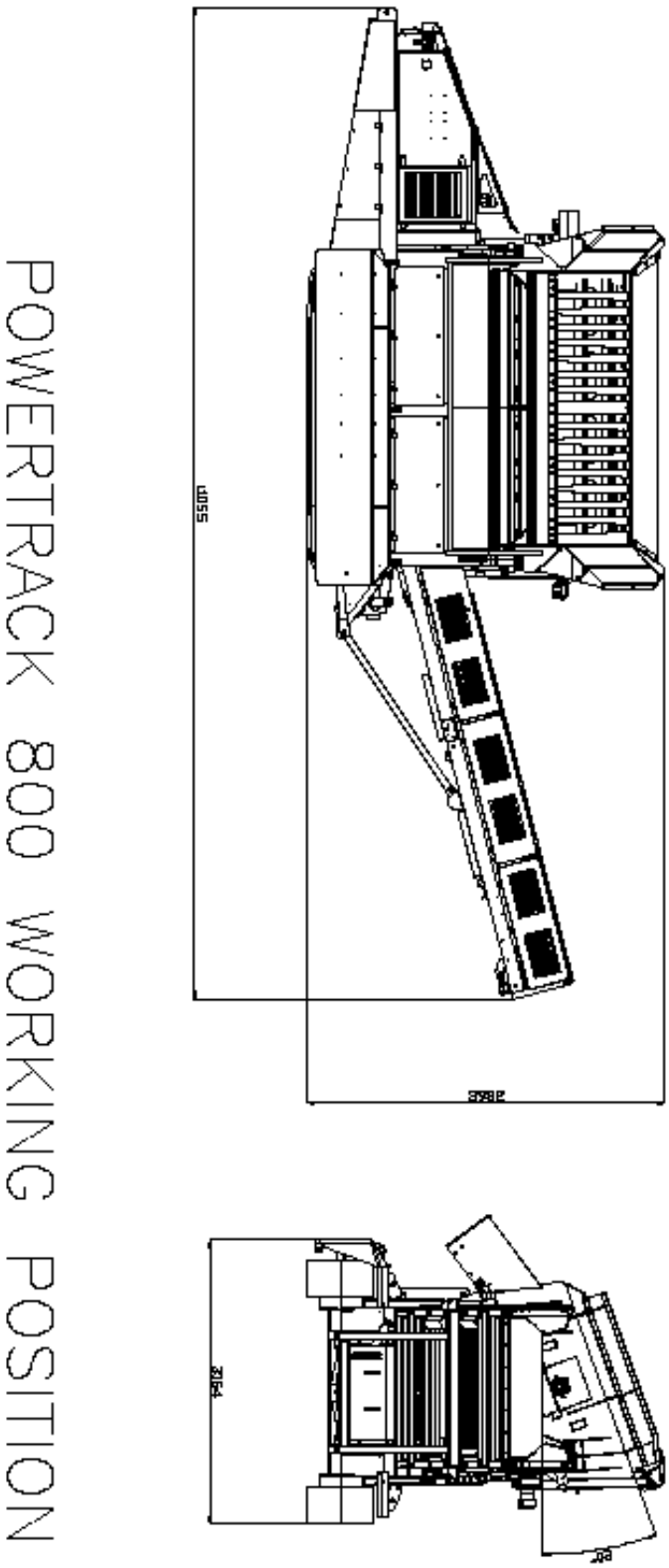
POWERTRACK 800 WORKING POSITION